BRIDGE PLANS ID	SHEET NO.
P041232-B01	1

INDEX OF SHEETS

1. TITLE SHEET
2. BRIDGE PLAN AND PROFILE
3. BRIDGE TYPICAL SECTION

SCDOT

South Carolina Department of Transportation

PROPOSED PLANS FOR

PICKENS COUNTY
PROJECT ID P041232
STATE ROUTE SC 124 (OLD EASLEY HWY.)
REPLACE BRIDGE OVER GEORGES CREEK

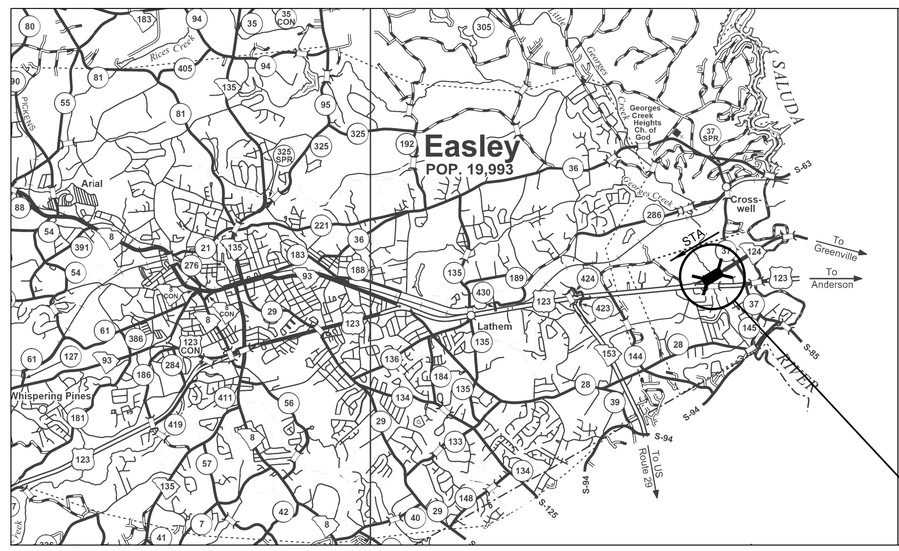

LAYOUT

-N-

SITE LOCATION

Approximate Location of Bridge is

Latitude	34°-49′-59″ N
Longitude	82°-29′-50″ W

3 DAYS BEFORE DIGGING IN
SOUTH CAROLINA

CALL 811

SOUTH CAROLINA 811 (SC811)
WWW.SC811.COM
ALL UTILITIES MAY NOT BE A MEMBER OF SC811

ASSET ID NOT ASSIGNED

TRAFFIC DATA

2020 ADT 9,500 V.P.D.

2040* ADT 12,065* V.P.D.

TRUCKS 4 %

*DESIGN TRAFFIC DATA

NET LENGTH OF ROADWAY	0.000	MILES
NET LENGTH OF BRIDGES	0.032	MILES
NET LENGTH OF PROJECT	0.032	MILES
LENGTH OF EXCEPTIONS	0.000	MILES
GROSS LENGTH OF PROJECT	0.032	MILES

NOTE: EXCEPT AS MAY OTHERWISE BE SPECIFIED ON THE PLANS OR IN THE SPECIAL PROVISIONS, ALL MATERIALS AND WORKMANSHIP ON THIS PROJECT SHALL CONFORM TO THE SOUTH CAROLINA DEPARTMENT OF TRANSPORTATION STANDARD SPECIFICATIONS FOR HIGHWAY CONSTRUCTION (2007 EDITION) AND THE STANDARD DRAWINGS FOR ROAD CONSTRUCTION IN EFFECT AT THE TIME OF LETTING.

CONSULTING ENGINEERING FIRM

HDR

ENGINEER OF RECORD

CONCEPTUAL PLANS

NOT FOR CONSTRUCTION

FOR CONSTRUCTION : _____ _____
DATE

RMCKENNA
12-14-22
P041232-B01_ts.dgn

REVIEWED		
DR.	RAM	A1Z
	BY	CHK

12-22
DATE

BRIDGE PLANS ID	SHEET NO.
P041232-B01	2

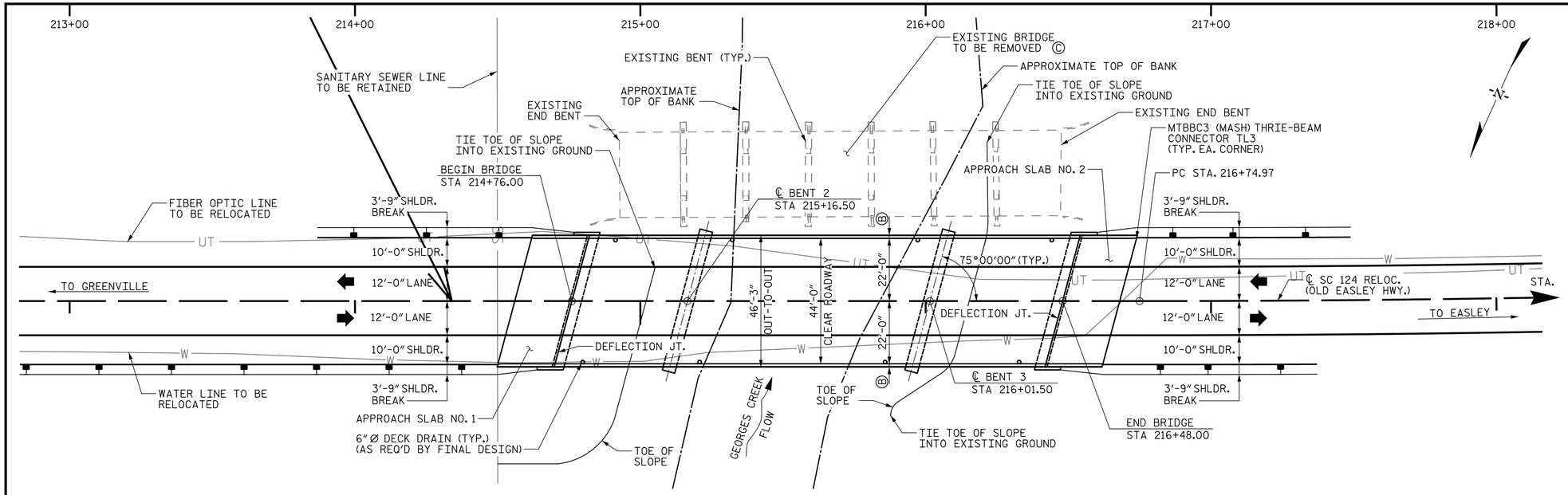

PLAN

(NOTE: BRIDGE END DRAINAGE IS NOT SHOWN)

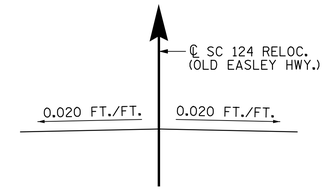

TYPICAL THROUGHOUT BRIDGE

SUPERELEVATION SKETCH

HORIZONTAL CURVE DATA

P.I. = 219+75.78
Δ = 4°18'24" (LT.)
Dc = 0°42'58"
T = 300.80'
L = 601.32'
E = 5.65'
R = 8,000.00'

CONTROL POINTS

CP 101 TRV SPIKE (D)
ELEVATION = 832.38'
N 1094568.064 E 1550380.46

CP 102 TRV SPIKE (D)
ELEVATION = 821.28'
N 1094734.291 E 1550824.26

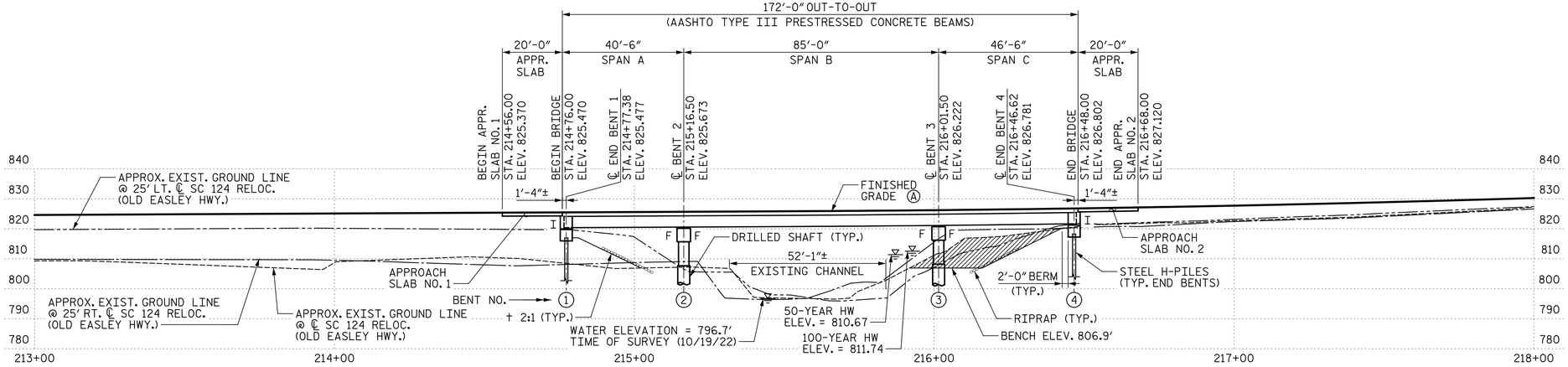

SECTION ALONG ℄ SC 124 RELOC. (OLD EASLEY HWY.)

HYDROLOGY DATA

D.A. = 27.3 SQ. MILES
Q_50 = 4,810 CFS
VELOCITY_50 = 5.6 FPS
AREA FURNISHED UNDER_50 = 856.2 SQ. FT.
INCLUDING 0.49 FT. OF BACKWATER
Q_100 = 5,530 CFS
VELOCITY_100 = 5.8 FPS
AREA FURNISHED UNDER_100 = 951.5 SQ. FT.
INCLUDING 0.57 FT. OF BACKWATER

OVERTOPPING FLOOD

Q > 7,710 CFS
PROBABILITY < 0.2%

VERTICAL CURVE DATA

PVI = 210+70.00	PVI = 217+70.00
ELEV. 823.44	ELEV. 826.94
V.C. = 405'	V.C. = 435'

(-)3.70% (+)0.50% (+)5.00%

NOTES:

Ⓐ PROPOSED PROFILE SET SO THAT THE LOW CHORD ELEVATION IS AT OR ABOVE THE EXISTING LOW CHORD ELEVATION.

Ⓑ INCLUDES 1'-0" MASH BARRIER PARAPET AND 1½" SLAB EXTENSION.

Ⓒ REMOVE AND DISPOSE OF EXISTING 36-'6" x 154'-0"± CONCRETE TEE BEAM AND SLAB BRIDGE AND APPURTENANCES IN ACCORDANCE WITH SECTION 202.4.2 OF THE STANDARD SPECIFICATIONS AND ENVIRONMENTAL REQUIREMENTS.

F - DENOTES FIXED BEARING
I - DENOTES INTEGRAL END BENT
† - NORMAL TO SKEW
= EXCAVATE HATCHED AREA

REV.			
REV.			
REV.			
REVIEWED			
QUAN.			
DR.	RAM	BDR	12-22
DES.			
	BY	CHK.	DATE

CONCEPTUAL PLANS

NOT FOR CONSTRUCTION

HDR ENGINEERING INC. OF THE CAROLINAS
1201 MAIN STREET
SUITE 800
COLUMBIA, SC, 29201
803-509-6600

SOUTH CAROLINA
DEPARTMENT OF TRANSPORTATION

BRIDGE PLAN AND PROFILE

SC 124 (OLD EASLEY HWY.) BRIDGE REPLACEMENT OVER GEORGES CREEK

COUNTY	ROUTE
PICKENS	SC 124

CADD FILE INFORMATION 4:48:44 PM
PLOTTED DATE: 01-13-23
FILE NAME: bP041232-B01_bp.dgn

BRIDGE PLANS ID	SHEET NO.
P041232-B01	3

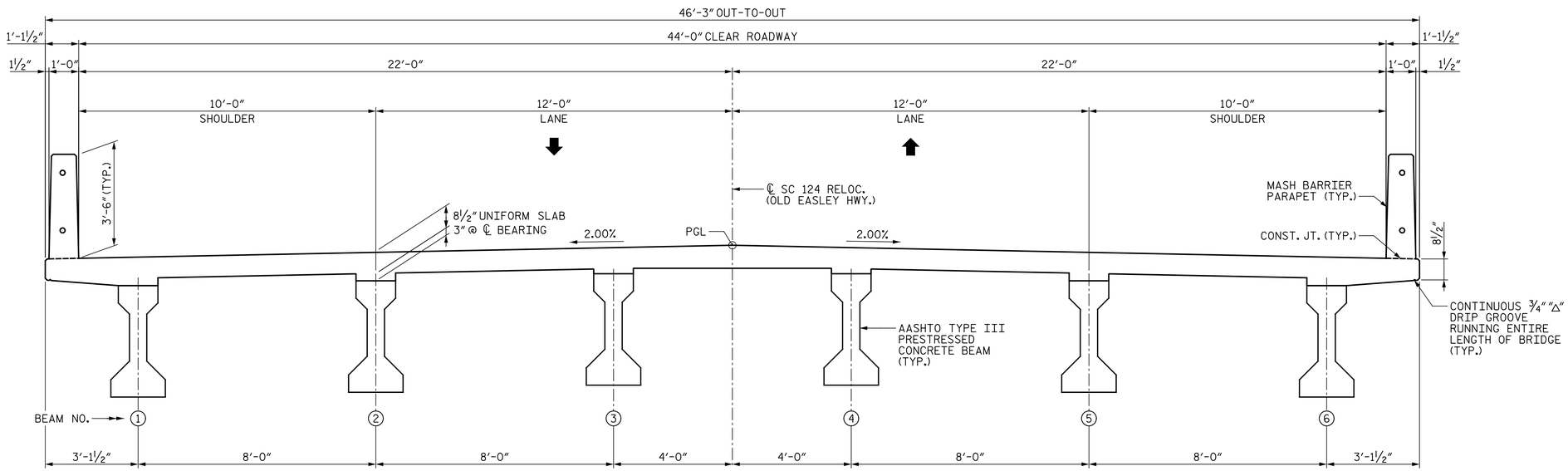

TYPICAL SECTION

(LOOKING IN DIRECTION OF STATIONING)

CADD FILE INFORMATION 3:39:04 PM
PLOTTED DATE: 12-22-22
FILE NAME: bP041232-B01_ss.dgn

REV.			
REV.			
REV.			
REVIEWED			
QUAN.			
DR.	RAM	AIZ	12-22
DES.			
	BY	CHK.	DATE

CONCEPTUAL PLANS

NOT FOR CONSTRUCTION

HDR ENGINEERING INC.
OF THE CAROLINAS

1201 MAIN STREET
SUITE 800
COLUMBIA, SC, 29201
803-509-6600

SOUTH CAROLINA
DEPARTMENT OF TRANSPORTATION

BRIDGE TYPICAL SECTION

SC 124 (OLD EASLEY HWY.) BRIDGE REPLACEMENT
OVER GEORGES CREEK

COUNTY	ROUTE
PICKENS	SC 124